ACI's 6th Advanced Summit on Medical Device Patents

February 25, 2016

Protecting Medical Device Patents

In view of 101, 103, and 112

David J.F. Gross
Partner
Faegre Baker Daniels LLP

Michael P. Kahn
Partner
Akin Gump Strauss Hauer & Feld LLP

Scott A. Hogan
Partner
Reising Ethington P.C.

Suzannah K. Sundby
Partner
Canady + Lortz LLP

Tweeting about this conference?

#ACIMedDevice

Michael P. Kahn

Narrowing the Scope of Patent Eligible Medical Devices and Diagnostics

(IN)ELIGIBLE SUBJECT MATTER

Overview

- The Scope of Patentable Subject Matter
  - Section 101
  - Recent Supreme Court Cases
  - Ariosa Diagnostics – a case study

- Trade Secrets as an Alternative
  - Patents v. trade secrets
  - Myriad, post-*Myriad*
  - Pending federal legislation

Medical Diagnostic Patents

- "It is said that the whole category of diagnostic claims is at risk. It is also said that a crisis of patent law and medical innovation may be upon us, and there seems to be some truth in that concern."

–Judge Lourie (Concurring in denial of rehearing *en banc* in *Ariosa Diagnostics, Inc. v. Sequenom, Inc.*, December 2, 2015)

35 U.S.C. § 101

- "Whoever invents or discovers any new and useful process, machine, manufacture, or composition of matter, or any new and useful improvement thereof, may obtain a patent therefor, subject to the conditions and requirements of this title."

Exceptions to § 101

- "The [Supreme] Court has long held that this provision contains an important implicit exception. '[L]aws of nature, natural phenomena, and abstract ideas' are not patentable."

Mayo quoting *Diamond v. Diehr*, 450 U.S. 175 (1981).

Recent Supreme Court Cases

- ***Bilski*** *v. Kappos*, 561 U.S. 593 (2010) (Abstract Ideas)
- ***Mayo*** *Collaborative Services v. Prometheus Laboratories, Inc.*, 132 S. Ct. 1289 (2012) (Laws of Nature)
- *Association for Molecular Pathology v.* ***Myriad*** *Genetics, Inc.* 133 S. Ct. 2107 (2013) (Laws of Nature)
- ***Alice*** *Corp. v. CLS Bank International*, 134 S. Ct. 2347 (2014) (Abstract Idea)

The Two-Part Test

(1) Determine whether the claims at issue are directed to a patent ineligible concept.

If they are,

(2) Consider the elements of each claim both individually and as an ordered combination to determine whether additional elements transform the nature of the claim into a patent-eligible application.

Growing Challenges

- Application of the two-part test:
  - Computer-implemented systems/methods
  - Diagnostic methods
  - Genetic material

A Case Study

- *Ariosa Diagnostics, Inc. v. Sequenom, Inc.,*

  788 F.3d 1371 (Fed. Cir. 2015)*; en banc petition denied at 2015 U.S. App. LEXIS 20842 (Fed. Cir. 2015)*

  - Discovered paternally-inherited cffDNA in maternal plasma and serum
  - Patented a method of isolating, amplifying and testing the cffDNA to determine fetal characteristics
  - Used a combination of known techniques

A Case Study

- District court granted summary judgment of invalidity under § 101
- Ariosa appealed
- Parties agreed that the patent does not claim cffDNA or even paternally-inherited cffDNA

A Case Study

- Comments from the original panel:
  - "[T]he method reflects a significant human contribution in that [Drs.] Lo and Wainscoat combined and utilized man-made tools of biotechnology in a new way that revolutionized prenatal care"
  - The invention "avoids the risks of widely-used techniques that took samples from the fetus or placenta"
  - "A groundbreaking invention."
  - "The new use of the previously discarded maternal plasma to achieve such an advantageous result is deserving of patent protection."

A Case Study

- But… the panel *affirmed*:
  - "The method therefore begins and ends with a natural phenomenon. Thus the claims are directed to matter that is naturally occurring."
  - "For process claims that encompass natural phenomenon, the process steps are the additional features that must be new and useful."
  - "Because the method steps were well-understood, conventional and routine, the method of detecting paternally inherited cffDNA is not new and useful"

Amici Curiae Supporting Review

- The invention must be considered as a whole, and not "dissected into its individual steps"
  - Whether the claims target the natural phenomenon or a patentable application of a natural phenomenon

(*Brief of IPO, as amicus curiae, a*t 2, 7-8)

Amici Curiae Supporting Review

- The court should consider whether claims are narrowly drawn to "not unduly preempt ineligible subject matter"

  (IPO Br. at 8-9)

  - "[T]he principle of preemption is the basis for the judicial exceptions to patentability." *(788 F.3d at 1379)*

  - Is a lack of undue preemption evidence that there is an inventive concept that transforms the claim under Mayo's Step 2?

    (IPO Br. at 10)

Amici Curiae Supporting Review

- The panel's application of the two-part Mayo test renders the preemption inquiry moot

  (*Brief of NYIPLA as amicus curiae in favor of en banc rehearing*)

- "The failure to consider preemption has resulted in courts and the PTO over-using § 101 as a gatekeeper."

  (NYIPLA Br. at 7)

Rehearing Denied

- December 2, 2015 - Concurrences by Judges Lourie and Dyk; Dissent by Judge Newman

- Judge Lourie's concurrence
  - "I find no principled basis to distinguish this case from *Mayo*, by which we are bound. I write separately to express some thoughts concerning laws of nature and abstract ideas, which seem to be at the heart of patent-eligibility issues in the medical sciences."

  - "In my view, neither of the traditional preclusions of laws of nature or of abstract ideas ought to prohibit patenting of the subject matter in this case."

Rehearing Denied

- Judge Dyk's concurrence:
  - "[A]s I see it, there is a problem with *Mayo* insofar as it concludes that inventive concept cannot come from discovering something new in nature . . ."
  - *"Mayo* did not fully take into account the fact that an inventive concept can come . . . from the creativity and novelty of the discovery of the law itself.
  - "This is especially true in the life sciences, where development of useful new diagnostic and therapeutic methods is driven by investigation of complex biological systems.
  - "I worry that method claims that apply newly discovered natural laws and phenomena in somewhat conventional ways are screened out by the *Mayo* test."

The Path Forward

- Further clarification of *Mayo*?
- Legislative action?
- Claim drafting solutions?
- Alternatives to patent protection?

Trade Secrets

An Alternative to the § 101 Gauntlet

Patents v. Trade Secrets

- Patent protection
  - Public benefit of disclosure and follow-on innovation
  - Defined market monopoly
  - Maintains the incentive to innovate
- Trade secret protection
  - Individual benefit
  - Restricted access
  - Less-certain route to recoup investment

Trade Secrets

- Information must not be generally known or readily ascertainable
- It must be secret
- The owner must make reasonable efforts to preserve its secrecy
- Must have sufficient value

Myriad, Post-*Myriad*

- Patents invalidated under § 101
  - Myriad had identified key genetic sequences indicating higher risk of developing breast and ovarian cancer
  - Patents invalidated as "products of nature"

- Myriad is keeping its mutation data as a trade secret, which has made Myriad's BRCA testing statistically more meaningful than others'

Trade Secrets

- Defend Trade Secrets Act of 2015
  - Proposed federal trade secret law
  - Injunctions
  - Monetary damages
    - Actual loss + unjust enrichment
    - (or) Reasonable royalty
    - Double damages for willful infringement
    - Attorney's fees for bad faith litigation

AMERICAN CONFERENCE INSTITUTE

Trade Secrets

- Procedure for requesting a civil seizure of property
  - TRO or injunction would be inadequate
  - Irreparable harm
  - Balance of the hardships
  - Likelihood of success
  - Identifies the property to be seized with reasonable particularity
  - Risk of flight or property destruction
  - Applicant has not publicized the requested seizure
- Proposed only in "extraordinary circumstances"

David J.F. Gross

Obviousness of Eligible Medical Device and Diagnostic Claims

OBVIOUSNESS OF ELIGIBLE CLAIMS

Obviousness

Question of law, based on underlying facts

1. Level of ordinary skill in the art
2. Scope and content of the prior art
3. Differences between the prior art and the claims
4. Secondary considerations of non-obviousness:
    - Commercial Success
    - Long-felt but unmet needs
    - Failure of others
    - Unexpected results

Obviousness

What do the courts really want to know?

- Would an ordinary person skilled in the art have been motivated to combine known elements in the prior art that result in the patented invention?

Obviousness

Motivation to Combine: It's a Fact

Ivera Medical Corp v. Hospira, Inc. (Fed. Cir. 2015)

- Patented device was a vented disinfecting cap for medical implements (*e.g.*, IV connectors)
- District court found Ivera's patents obvious on summary judgment (3 patents found invalid)

Patented Cap

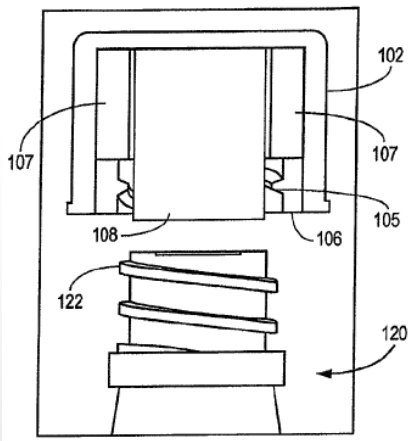

FIG. 9

Prior Art

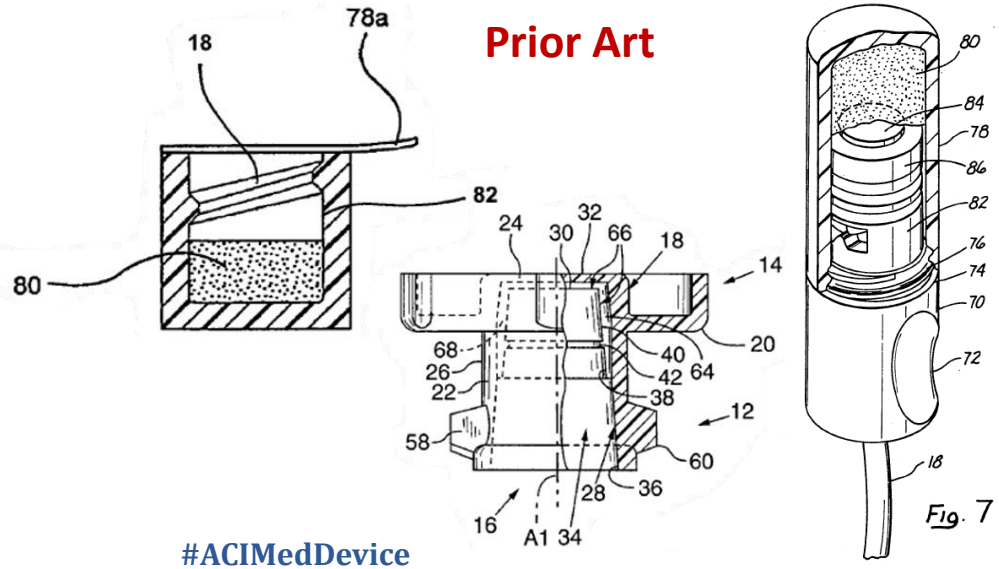

Fig. 7

#ACIMedDevice

Obviousness

Motivation to Combine: It's a Fact

Ivera Medical Corp v. Hospira, Inc. (Fed. Cir. 2015)

- On appeal, Federal Circuit ***reversed:***

"We agree with Ivera that record evidence establishes a ***genuine dispute*** over whether a person of ordinary skill would have been motivated to add a vent to [a prior art] disinfecting cap."

- Ivera's evidence created a fact dispute:
  - Declarations from expert and two inventors of prior art patents
  - Hospira's evidence did "not foreclose a genuine dispute over whether a person of ordinary skill would have been motivated to add a vent" to a disinfecting cap.

Obviousness

Motivation to Combine: what's your problem?

Insite Vision Inc. v. Sandoz, Inc. (Fed. Cir. 2015)

- Patent claimed methods for treating eye infections by topical administration of azithromycin. Previously, it was only used orally.
- District court found claims not obvious; Federal Circuit ***affirmed***.
- What was the problem facing a person of ordinary skill at the time of the invention?
  - Broad: improved topical treatments for eye infections
  - Narrow: topically administering azithromycin to treat conjunctivitis
- "Whether a person of ordinary skill in the art would narrow the research focus to lead to the invention depends on the facts."

"An ***overly narrow*** 'statement of the problem [can] represent[] a form of ***prohibited reliance on hindsight***, [because] [o]ften the inventive contribution lies in defining the problem in a new revelatory way.'"

Obviousness

Motivation to Combine: what's your problem?

Novartis Pharmaceuticals v. Watson Laboratories (Fed. Cir. 2015)

- Patent claimed a transdermal device containing rivastigmine and an antioxidant to treat dementia
- District court found claims not obvious; Federal Circuit ***affirmed***.
- At time of the invention, rivastigmine was not known to be susceptible to oxidative degradation, and so "one of skill in the art would not have been motivated to patch together the prior art to add an antioxidant to a rivastigmine formulation."

> "Even an obvious solution, however, does not render an invention obvious if the ***problem solved was previously unknown***."

Obviousness

Motivation to Combine: what's your problem?

Key Takeaways:

- Identification of problem "**frames**" the obviousness question
  - Step 1: Identify the problem facing one skilled in the art at the time of the invention
  - Step 2: Ask whether a person of ordinary skill in the art would have been motivated to solve that problem by combining prior art to create claimed invention
- Identifying the problem is a **fact** question
- Identifying problem too narrowly reveals improper **hindsight**
  - Problem is not necessarily specific problem solved by the invention
  - Cannot define the problem in terms of its solution
  - Inventive contribution may lie in defining the problem in a new revelatory way

Obviousness

Commercial success: why did it succeed?

Ethicon Endo-Surgery, Inc. v. Covidien LP (Fed. Cir. 2016)

- Patent claimed a surgical stapler with staples having (1) different heights and (2) nonparallel legs. Both were well-known in the prior art, but invention was the combination.
- PTAB found claims obvious; Federal Circuit ***affirmed***.

> "[T]he commercial success of the [infringing] products was ***primarily attributable*** to a ***single feature present in the prior art…rather than the combination*** of prior art features that is the alleged invention . . . ."

- Takeaway: Commercial success is not pertinent if it is "due to an unclaimed feature" or "if the feature that creates the commercial success was known in the prior art."

Obviousness

Commercial success: why did it succeed?

AstraZeneca LP v. Breath Ltd. (Fed. Cir. 2015)

- Patent claimed a sterile budesonide product for treating asthma. Budesonide and sterilization techniques both well-known in prior art.
- District court found claims obvious; Federal Circuit ***affirmed***.
- Court found the "underlying need" was for the nebulized budesonide, not the sterility, and commercial success was due to unclaimed features (*e.g.*, efficacy, safety, nebulized delivery)

"Sterility is an FDA requirement; it is not driving demand . . . . Whether or not there is a nexus between the novel features of the patented product and the commercial success must be evaluated in terms of ***what is driving sales, not what is allowing the product to reach the shelf in the first place***."

Obviousness

Unexpected Results: what did you expect?

Cadence Pharmaceuticals v. Excela Pharmsci (Fed. Cir. 2015)

- Patent claimed stable liquid acetaminophen compositions.
- District court found claims not obvious; Federal Circuit ***affirmed***.
- Patented invention resulted in formulations that were stable for two years, whereas prior art formulation was stable for several months.

> "Even if these results were ***only somewhat unexpected***, they are ***still evidence of non-obviousness***, albeit less so than if the results were vastly unexpected."

- Takeaway: results do not have to be completely unexpected to be relevant to obviousness

Suzannah K. Sundby

Invalidity of Medical Device and Diagnostic Patent Claims for Lack of Written Description

INVALIDITY UNDER 112

Patent Eligibility and Functional Language

- In order to overcome 101 rejections, many examiners recommend adding functional language.
- Functional language can seemingly broaden the scope of biotech claims.
  - Depends on if the glass is half full or half empty.
- Functional language can lead to problems with:
  - Prior art
  - Enablement
  - Written Description
  - Indefiniteness

Enablement and Functional Language

- Functional language can provide the requisite enablement for biotech claims by, e.g., narrowing the claim scope.
- However, ensure the breadth of the claim scope due to the functional language is enabled.
- Remember *In re Wands* and routine experimentation.
  - If not routine, provide detailed experimental protocols in the specification.

Written Description and Functional Language

- As the biotech arts are highly unpredictable, functional claiming often leads to invalidity for lack of written description support.

Written Description

- The specification shall contain a written description of the invention, and of the manner and process of making and using it, in such full, clear, concise, and exact terms as to enable any person skilled in the art to which it pertains, or with which it is most nearly connected, to make and use the same…

Over a Decade Ago

When DNA was patent eligible…

- Enzo v. Gen-Probe (Fed. Cir. 2002)
- Claim 1 of US 4,900,659:
  - 1. A composition of matter that is specific for Neisseria gonorrhoeae comprising at least one nucleotide sequence *for which the ratio of the amount of said sequence which hybridizes to chromosomal DNA of Neisseria gonorrhoeae to the amount of said sequence which hybridizes to chromosomal DNA of Neisseria meningitidis is greater than about five*, said ratio being obtained by a method comprising the following steps…

Federal Circuit said:

- [A]dequate written description of genetic material "`requires a precise definition, such as by structure, formula, chemical name, or physical properties,' not a mere wish or plan for obtaining the claimed chemical invention," and that none of those descriptions appeared in that patent.
- It is not correct, however, that all functional descriptions of genetic material fail to meet the written description requirement.

Referred to USPTO's Guidelines

- [T]he written description requirement can be met by "show[ing] that an invention is complete by disclosure of sufficiently detailed, relevant identifying characteristics... *i.e.,* complete or partial structure, other physical and/or chemical properties, *functional characteristics when coupled with a known or disclosed correlation between function and structure*, or some combination of such characteristics." *Guidelines,* 66 Fed. Reg. at 1106 (emphasis added).

No Actual Compounds

- U of Rochester v. Searle (Fed. Cir. 2004)
- Claim 1 of US 6,048,850:
  - 1. A method for *selectively inhibiting PGHS-2 activity* in a human host, comprising administering a non-steroidal compound *that selectively inhibits activity of the PGHS-2 gene product* to a human host in need of such treatment.

Federal Circuit said:

- Regardless whether a compound is claimed per se or a method is claimed that entails the use of the compound, the inventor cannot lay claim to that subject matter unless he can provide a description of the compound sufficient to distinguish infringing compounds from non-infringing compounds, or infringing methods from non-infringing methods.

Ditto…

- Ariad v. Eli Lilly (Fed. Cir. 2010)
- Claim 80 of US 6,410,516:
  - 80. [A method for modifying effects of external influences on a eukaryotic cell, which external influences induce NF-kB mediated intracellular signaling, the method comprising altering NF-kB activity in the cells such that NF-kB-mediated effects of external influences are modified, wherein NF-kB activity in the cell is reduced] wherein *reducing NF-kB activity comprises reducing binding of NF-kB to NF-kB recognition sites on genes which are transcriptionally regulated by NF-kB*.

Representative of Genus

- Carnegie Mellon v. Hoffman La-Roche (Fed. Cir. 2008)
- Claim 1 of US 4,767,708:
  - 1. A recombinant plasmid containing *a cloned complete structural gene coding region isolated from a bacterial source for the expression of DNA polymerase I*, under operable control of a *conditionally controllable foreign promoter functionally linked to said structural gene coding region*, said foreign promoter being functional to express said DNA polymerase I in a suitable bacterial or yeast host system.

Representative of Genus

- Claim 1 of US 6,017,745:
  - 1. A recombinant plasmid containing a DNA coding sequence for the expression of DNA polymerase activity, wherein said DNA coding sequence is derived from *a source that encodes a bacterial DNA Polymerase*, said source not containing an amber mutation affecting expression of said DNA polymerase activity, such that when said plasmid is transformed into a bacterial host system the host system can grow and divide thereby replicating said plasmid.

Federal Circuit Explained

- Adequate written description can be met by providing a "representative number of species". *Eli Lilly* (Fed. Cir. 1997).
  - Means that the *species which are adequately described are representative of the entire genus*.
  - When there is substantial variation within the genus, one must describe a sufficient variety of species to reflect the variation within the genus.

Federal Circuit said:

- To satisfy the written description requirement in the case of a chemical or biotechnological genus, more than a statement of the genus is normally required.
- [T]he narrow disclosure of the *E. coli polA* gene was not representative of and failed to adequately support the entire claimed genus under *Eli Lilly*.

No Example with All Limitations

- Novozymes v. Dupont (Fed. Cir. 2013)
- Claim 1 of US 7,713,723:
  - 1. An isolated variant of a parent alpha-amylase, wherein:

    (a) the variant has at least 90% sequence identity to SEQ ID NO: 6 [BSG alpha-amylase],

    (b) the variant comprises a substitution of serine at position 239 relative to the parent alpha-amylase, using the amino acid sequence of SEQ ID NO: 8 [BLA alpha-amylase] for determining position numbering, and

    (c) the variant *has increased thermostability relative to the parent alpha-amylase, wherein thermostability is determined at pH 4.5, 90°C and 5 ppm calcium and has alpha-amylase activity*.

Examples of One Sub-Genus

- AbbVie v. Janssen (Fed. Cir. 2014)
- Claim 29 of US 6,914,128:
  - 29. A neutralizing isolated human antibody, or antigen-binding portion thereof that *binds to human IL–12 and dissociates from human IL–12 with a k_{off} rate constant of $1x10^{-2}$ s^{-1} or less*, as determined by surface plasmon resonance.

Federal Circuit said:

- AbbVie used a trial and error approach to modify individual amino acids in order to improve the IL–12 binding affinity.
- [The] patents do not describe any common structural features of the claimed antibodies. The asserted claims attempt to claim every fully human IL–12 antibody that would achieve a desired result, i.e., high binding affinity and neutralizing activity…

Federal Circuit said:

- It is true that functionally defined claims can meet the written description requirement if a reasonable structure-function correlation is established, whether by the inventor as described in the specification or known in the art at the time of the filing date.
- [T]he record here does not indicate such an established correlation.

Practice Pointers

- Provide definitions for functional language
- Ensure the specification explicitly sets forth detailed protocols for determining whether something exhibits the recited functional characteristics
- Provide a representative number of species
  - Actual compounds
  - Variety of different sub-species
  - Set forth function/structure correlation
- Avoid functional limitations inherent to prior art and naturally occurring products

Scott A. Hogan

Invalidity of Medical Device and Diagnostic Patent Claims for Indefiniteness

INVALIDITY UNDER 112

The Road to Indefiniteness

Please Select Your Route

The Road to Indefiniteness

An Overview

- 35 U.S.C. 112(b) – In the wake of *Nautilus*
  - After the dust settled, the standard for indefiniteness may be reworded, but its application has not led to drastically different results.
  - Claims reciting measurable properties or characteristics are likely targets for validity challenge.

- 35 U.S.C. 112(f) – An alternate route to 112(b) problems
  - *Williamson v. Citrix* has made this route a little easier to find.
  - Functional claim language warrants attention by practitioners.

In the Wake of *Nautilus*

A New Standard…Sort of…

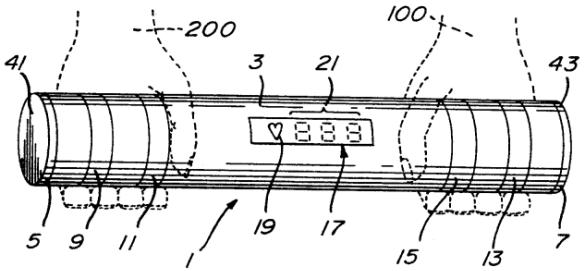

- District Court held claims invalid. The culprit: *in spaced relation*.
- CAFC reverses DC: a claim is indefinite only when it is "not amenable to construction" or "insolubly ambiguous."
- Supreme Court vacates, setting forth a new "reasonable certainty" standard.
- Panic ensues among patentees whose newsfeed only provides Nautilus, Inc. press release.
- On remand, CAFC reaches same result with the "new" standard.

In the Wake of *Nautilus*

A New Standard…Sort of…

- **New Standard**

  a patent is invalid for indefiniteness if its claims, read in light of the specification delineating the patent, and the prosecution history, fail to inform, with reasonable certainty, those skilled in the art about the scope of the invention.

- **Old Standard**

  a claim is indefinite only when it is "not amenable to construction" or "insolubly ambiguous."

  Insolubly ambiguous: "if reasonable efforts at claim construction result in a definition that does not provide sufficient particularity and clarity to inform skilled artisans of the bounds of the claim." (*Nautilus I*, CAFC 2013)

In the Wake of *Nautilus*

On Remand – Highlights from Nautilus III

- Reasonable Certainty Under Nautilus II Is a Familiar Standard
- …we may now steer by the bright star of "reasonable certainty," rather than the unreliable compass of "insolubly ambiguous."
- The *Nautilus II* standard "does not render all of the prior Federal Circuit and district court cases inapplicable…all that is required is that the patent apprise ordinary-skilled artisans of the scope of the invention."
  - CAFC seems to be making it clear that it will not allow the "new" standard to become a new and potent validity-killer.
  - that terms like "substantially," "about," "relatively small," "close proximity," and terms of degree are not suddenly *per se* indefinite

In the Wake of *Nautilus*

Post-Nautilus Invalidity

- Dow Chemical Co. v. Nova Chemicals Corp., 803 F.3d 620 (Fed. Cir. 2015).
  - **What**: *a slope of strain hardening coefficient greater than or equal to 1.3*
  - **Why**: SHC not a term known in the art; court determined that skilled artisan would know that "slope" refers to "maximum" slope; but record showed four different ways of calculating the maximum slope that can lead to four different results.

    It is no longer enough that a skilled artisan knows of a method to calculate the slope (i.e., the term is amendable to construction). Where there are multiple known ways to calculate the value in question that lead to different results, and the intrinsic record offers no guidance, the claim is indefinite.

- Teva Pharmaceuticals USA, Inc. v. Sandoz, Inc., 789 F.3d 1335 (Fed. Cir. 2015).
  - **What**: *molecular weight*
  - **Why**: molecular weight can be measured by three different averages: M_p or M_w or M_n. Neither the claims, the specification, nor the prosecution history clarifies which average to use, and it does not matter if a skilled artisan could determine which is the most appropriate.

In the Wake of *Nautilus*

Post-Nautilus Invalidity

- Interval Licensing LLC v. AOL, Inc., 766 F.3d 1364 (2015).
  - **What**: [to display an image] *in an unobtrusive manner that does not distract a user …from a primary interaction with the display device or apparatus*
  - **Why**: the claim term itself is "purely subjective" – i.e., what is unobtrusive to one user may not be to another. The specification is "muddled" as to whether the phrase has temporal as well as spatial dimensions. The prosecution history is unclear whether the phrase is tied to a particular embodiment.

    Specification gives an "e.g." example of unobtrusive, leaving the reader wondering what other examples would be considered unobtrusive – court indicates that an "i.e." definition could have saved the claim.

    "It is not enough, as some of the language in our prior cases may have suggested, to identify 'some standard for measuring the scope of the phrase.'"

In the Wake of *Nautilus*

Definitely a Medical Device

- Ethicon Endo-Surgery, Inc. v. Covidien, Inc., 796 F.3d 1312 (Fed. Cir. 2015).
  - **What**: *clamping pressure of 210 psi at the clamping surface area*; and *an average predetermined clamping pressure between and including 60 psi and 210 psi*
  - **Why**: the specification clearly discloses that the claimed clamping/coaptation pressures are average pressures on tissue disposed between the tissue pad and blade, and are measured when the clamping arm and blade are in a closed position.

    The disclosure is sufficient to inform skilled artisans as to where these average pressures should be measured—the midpoint of the tissue pad (also the midpoint of the clamping arm for the ultrasonic shears at issue here).

    No specific test procedure or technique is required to be disclosed.

Practice Tips

- Ambiguity is not your friend.
- Where a claim term has more than one known meaning in the art, be explicit, at least in the specification or during prosecution. Inventors are a good resource.
- Use dependent claims
- Be especially vigilant with claim limitations including measurable and/or quantitative properties.

An Unwanted Shortcut

Indefiniteness in the Context of 112(f)

- BNA Article: *Making Sense of Non(ce)sense*
- Compared/contrasted two CAFC cases regarding means-plus-function treatment of claims that do not use the term "means"
- In *Bosch* and *Williamson*, similar fact patterns led to MPF treatment and invalidity in *Bosch*, and no MPF treatment and no invalidity in *Williamson*
- The authors referred to the CAFC's analyses as "inconsistent" and "perplexing"

The CAFC Answers

Williamson v. Citrix (en banc)

- **Old Standard**
  - Where a patent claim uses the word "means" with functional language, it is presumed that §112(f) is invoked.
  - Absent the word "means" it is presumed that §112(f) is not invoked. The presumption is a strong one that is not readily overcome. Patent had to be "sufficiently devoid of structure" to indicate to a skilled artisan that the drafter constructively engaged in MPF claiming.
- **New Standard**
  - Where a patent claim uses the word "means" followed by functional language, it is presumed that §112(f) is invoked.
  - Absent the word "means" it is presumed that §112(f) is not invoked. The presumption is no stronger than when "means" is used.

The CAFC Answers

Williamson v. Citrix (en banc)

- **What**: *distributed learning control module for receiving communications transmitted between the presenter and the audience member computer systems and for relaying the communications to an intended receiving computer system and for coordinating the operation of the streaming data module*.
- **Why**: traditional means-plus function format, with "module" replacing "means" followed by three recited functions.

  -Module is a nonce word connoting no structure, even with the three preceding words.

  -Intrinsic record offers no additional structural connotation.

  -§112(f) is invoked, so the claim passage is limited to the structure(s) in the specification that perform the recited function.

  -claim is indefinite under §112(b) since no structure for performing the function is disclosed – in this case, an algorithm is required.

Practice Tips

Avoiding the one-two punch

- Any time functional language is used in a claim, be sure to disclose corresponding structure for performing that function.
- Avoid so-called nonce words where possible in claims in favor of words that connote structure to skilled artisans. Inventors are a good resource.
- Provide definitions of nonce word modifiers in the specification.
- Use dependent claims to provide structure to functional language.
- Include structural features in functional claim language that will invariably be present in accused devices.

Thank You!

- Disclaimer: These materials are public information and have been prepared solely for educational and entertainment purposes to contribute to the understanding of U.S. intellectual property law. These materials reflect only the personal views of the authors and are not a source of legal advice. It is understood that each case is fact specific, and that the appropriate solution in any case will vary. Therefore, these materials may or may not be relevant to any particular situation. Thus, the authors and their organizations cannot be bound either philosophically or as representatives of their various present and future clients to the comments expressed in these materials. The presentation of these materials does not establish any form of attorney-client relationship with the authors or their organizations. While every attempt was made to ensure that these materials are accurate, errors or omissions may be contained therein, for which any liability is disclaimed.

David J.F. Gross, Esq.
Faegre Baker Daniels LLP

1950 University Ave., Suite 450
East Palo Alto, CA 94303

T: 650.324.6704
F: 650.324.6701
David.Gross@FaegreBD.com

David Gross is a intellectual property trial lawyer in the Silicon Valley office of Faegre Baker Daniels, a 750-professional law firm with offices in the United States, UK, and China.

Scott A. Hogan, Esq.
Reising Ethington P.C.

755 W. Big Beaver Rd., Suite 1850
Troy, MI 48084

T: 248.689.3500
F: 248.689.4071
Hogan@reising.com

Mr. Hogan works together with clients to help them identify and protect their intellectual property while respecting the intellectual property of others. Having hands-on work experience across a broad spectrum of fields, from biopolymers and polymer solution chemistry to electric generators and automotive components, he is as at home at a university research symposium as he is on a manufacturing shop floor.

Michael P. Kahn, Esq.
Akin Gump Strauss Hauer & Feld LLP

One Bryant Park
Bank of America Tower
New York, NY 10036-6745

T: 212.872.1082
F: 212.872.1002
mkahn@akingump.com

Michael Kahn is a partner in Akin Gump's intellectual property litigation group. Michael is an experienced trial lawyer with first chair experience who focuses his practice on litigating patent infringement disputes and related claims such as trade secret misappropriation, unfair competition and breach of contract.

Suzannah K. Sundby, Esq.
Canady + Lortz LLP

1050 30th Street, NW
Washington, DC 20007

T: 202.486.8020
F: 202.540.8020
suzannah@canadylortz.com

Suzannah practices all aspects of intellectual property law including patent preparation, and prosecution, licensing, opinion work, strategic planning, and client counseling relating to diverse technologies including biochemistry, molecular biology, pharmaceuticals, industrial chemicals, microfluidics, diagnostics, medical devices, and nanotechnology.